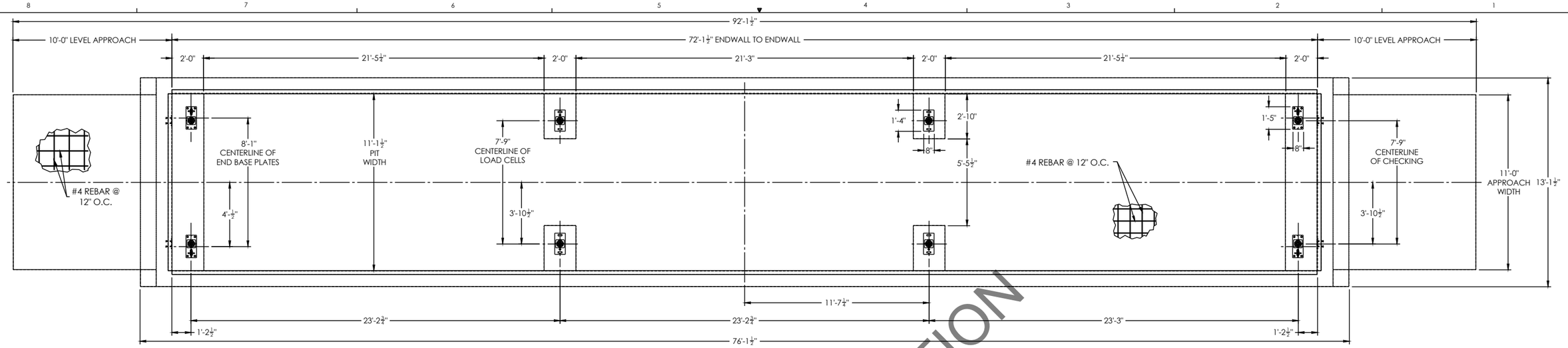

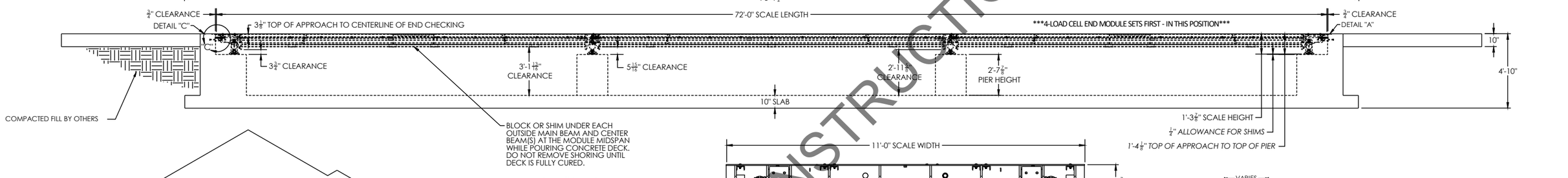

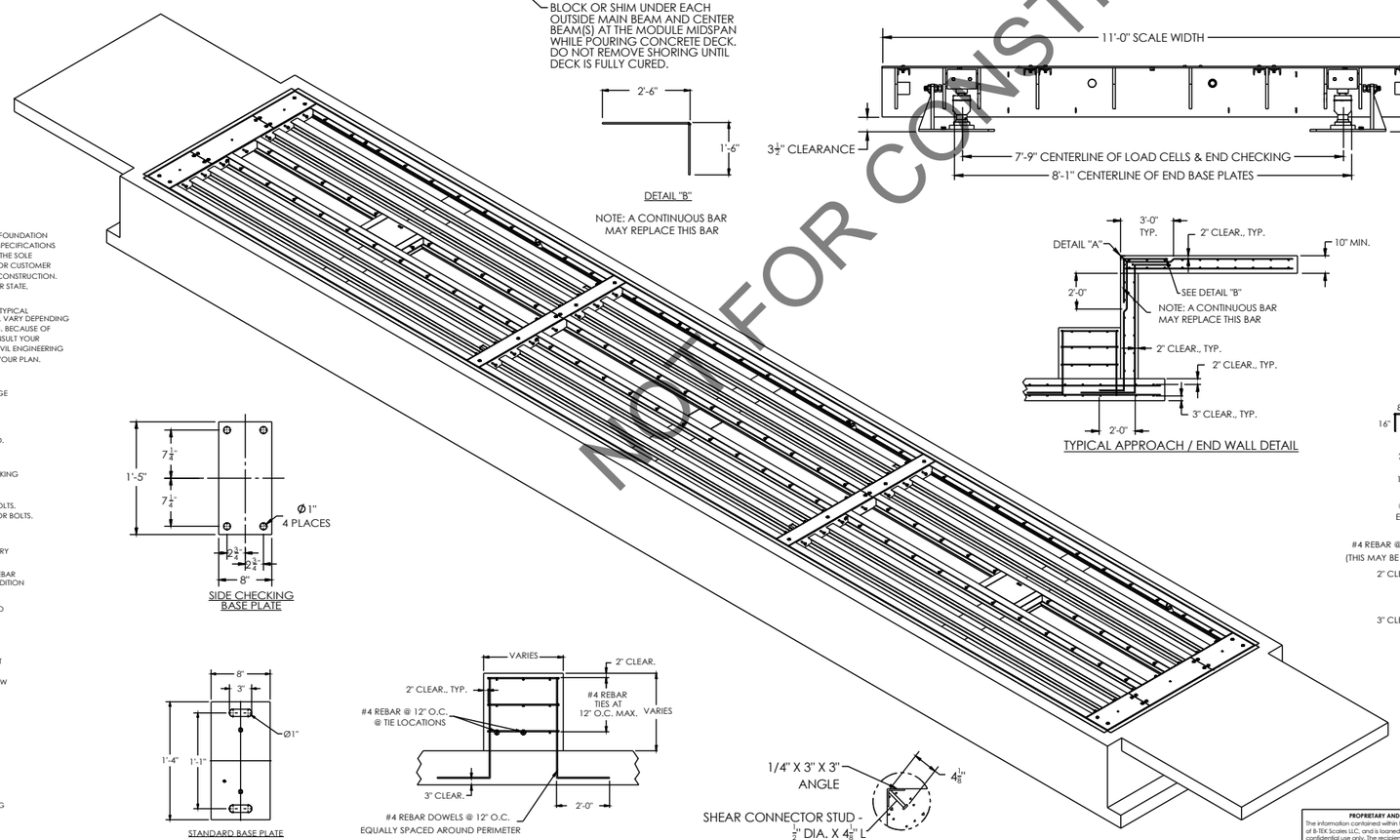

DETAIL "B"

NOTE: A CONTINUOUS BAR MAY REPLACE THIS BAR

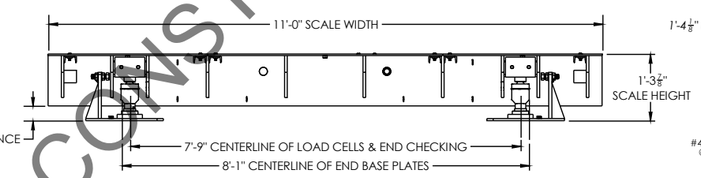

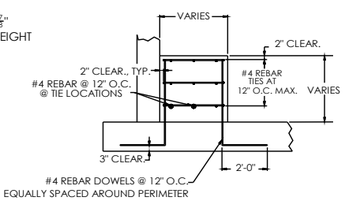

TYPICAL END PIER DETAIL

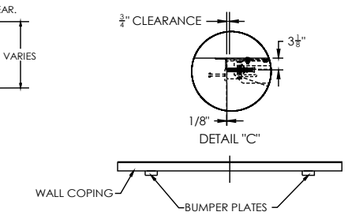

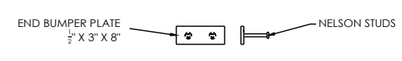

END BUMPER PLATE DETAIL BY OTHERS

TYPICAL APPROACH / END WALL DETAIL

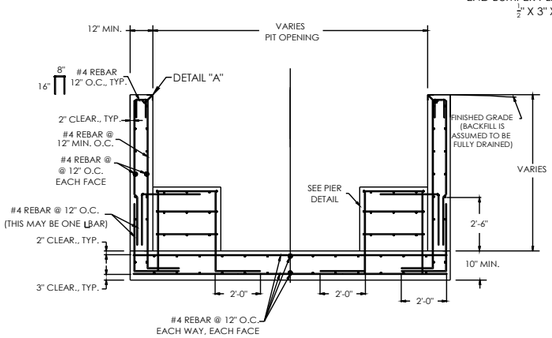

TYPICAL END SECTION VIEW

SIDE CHECKING BASE PLATE

STANDARD BASE PLATE

TYPICAL CENTER PIER DETAIL

DETAIL "A"

FOUNDATION NOTES:

1. THE FOUNDATION SHOWN IS A RECOMMENDED MINIMUM FOUNDATION BY B-TEK SCALES. YOUR LOCAL WEIGHTS AND MEASURES SPECIFICATIONS AND REQUIREMENTS MAY DIFFER FROM THAT SHOWN. IT IS THE SOLE RESPONSIBILITY OF THE FOUNDATION CONTRACTOR AND/OR CUSTOMER TO DEFINE THOSE REQUIREMENTS PRIOR TO FOUNDATION CONSTRUCTION. B-TEK IS NOT LIABLE FOR COMPLIANCE TO ANY PARTICULAR STATE, COUNTY, CITY, OR LOCAL MUNICIPALITY SPECIFICATIONS.
2. THE FOUNDATION REBAR DETAILS SHOWN ARE SUGGESTED TYPICAL CONFIGURATIONS. ACTUAL REBAR CONFIGURATIONS WILL VARY DEPENDING ON THE FOUNDATION CONTRACTOR'S TYPICAL PRACTICES. BECAUSE OF THIS, NO "STANDARD" REBAR SCHEDULE IS PROVIDED. CONSULT YOUR LOCAL WEIGHTS & MEASURES SPECIFICATIONS AND/OR CIVIL ENGINEERING FIRM FOR PARTICULAR QUESTIONS REGARDING REBAR IN YOUR PLAN.
3. FOUNDATION DESIGN BASED ON MINIMUM SOIL BEARING CAPACITY OF 3000 LB/FT^2 .
4. FOUNDATION TO BE INSTALLED TO INSURE PROPER DRAINAGE AWAY FROM SCALE.
5. REINFORCING STEEL TO CONFORM TO ASTM A615 GRADE 60 SPECIFICATIONS. #4 (1/2" DIA.) REBAR IS STANDARD.
6. CONCRETE OF 4000 PSI COMPRESSIVE STRENGTH REQUIRED.
7. PIERS MUST BE LEVEL AND IN THE SAME PLANE WITHIN +/- 1/8".
8. EXCAVATION, FORMS, REINFORCING STEEL, BUMPER CHECKING PLATES AND CONCRETE FURNISHED BY OTHERS.
9. ANCHOR BOLTS TO BE DRILLED AT TIME OF INSTALLATION. REQUIRES 3/4" DIA. X 7" LONG REDHEAD TYPE ANCHOR BOLTS. MAKE SURE PIER REBAR DOES NOT INTERFERE WITH ANCHOR BOLTS.
10. CONCRETE DECK SCALES:
    ON "FECD-SL" AND "EFTC" SERIES SCALES, DECK SHEETING, REBAR, AND MUDHOOKS ARE SUPPLIED, AND ARE FACTORY INSTALLED BY B-TEK.
    ON ALL OTHER SERIES OF SCALES, DECK SHEETING AND REBAR ARE NOT SUPPLIED, UNLESS SPECIFICALLY ORDERED IN ADDITION TO THE SCALE, AND ARE INSTALLED ON-SITE BY OTHERS.
11. DECK COPING WITH MUDHOOKS IS SUPPLIED AS STANDARD ON CONCRETE DECK PIT SERIES SCALES, TO BE INSTALLED ON-SITE BY OTHERS. SEE DECK DETAIL DRAWING FOR INSTALLATION SPECIFICS.
12. EXCAVATION
    APPROXIMATE EXCAVATION: 209.50 CUBIC YARDS FOR PIT
    DIG HOLE APPROXIMATELY 78' X 15' X 4'-10" DEEP FOR PIT
    DIG HOLES FOR PIER-ONLY FOUNDATION TO A LEVEL BELOW LOCAL FROST LINE CODES
    SAW CUT ALL CONCRETE OR ASPHALT BEFORE REMOVING
13. APPROXIMATE CONCRETE REQUIREMENTS:
    FLOOR SLAB: 31.00 CUBIC YARDS
    END WALLS: 2.75 CUBIC YARDS
    SIDE WALLS: 22.00 CUBIC YARDS
    APPROACH SLABS: 6.75 CUBIC YARDS
    PIERS: 6.75 CUBIC YARDS
    CONCRETE DECK: 18.00 CUBIC YARDS
14. WEIGHT OF LARGEST BRIDGE MODULE: 6,500 LBS.
15. WEIGHBRIDGE TO BE SUPPORTED MID-SPAN WHILE POURING CONCRETE DECK. DO NOT REMOVE SHORING UNTIL DECK IS FULLY CURED.
16. FOUNDATION TOLERANCES:
    WIDTH: +1/4", -0"
    LENGTH: +3/8", -0"
    HEIGHT: +1/8", -0"

NOT FOR CONSTRUCTION

PROPRIETARY AND CONFIDENTIAL
The information contained within this drawing is the property of B-TEK Scales LLC, and is loaned to the recipient for their confidential use only. The recipient promises and agrees that it shall not be used in a way that would prove to be detrimental to the interest of B-TEK Scales LLC, and that this drawing must be returned upon request. This drawing may not be reproduced, copied, loaned, or otherwise disposed of, directly or indirectly without the express written consent of B-TEK Scales LLC.

WARNING NOTICE
Truck Scales and Railroad Track Scales are designed to carry vehicular traffic only and are not designed to accommodate pedestrian traffic. Therefore, it is recommended that drivers, operators and passengers remain in the vehicle while it is on the scale platform. Furthermore, pedestrians should not walk or stand on the scale platform or approaches. Buyer assumes all responsibility for the control of any pedestrian traffic on the scale or scale approach areas, including but not limited to, the erection of any warning signs, barriers, and/or other devices to prohibit or prevent pedestrian traffic on the scale platform or approaches.

APPROVAL PLAN			
☐	FOR QUOTING / ESTIMATING ONLY NOT FOR CONSTRUCTION / FABRICATION		NAME	DATE
☒	RETURN OF APPROVAL NOT REQUIRED	DRAWN	MSM	2/4/20
☐	RETURN APPROVAL REQUIRED BEFORE ANY MANUFACTURING BEGINS	CHECKED		
		B-TEK CERTIFIED		

CUSTOMER APPROVAL:	DATE:
B-TEK ORDER #:	XXXXXX
DATE:	2/4/20
CUSTOMER:	XXXXXX
	XXXXXX
CUST. P.O. #:	XXXXXX

UNLESS OTHERWISE SPECIFIED:
DIMENSIONS ARE IN INCHES
TOLERANCES ARE AS FOLLOWS:
MACHINED - FRACTIONAL ±1/32"
FABRICATED - FRACTIONAL ±1/8"
ANGULAR ±1/2°
SQUARENESS ±1/8"
ALL WELDS TO BE 1/4" FILLET CONTINUOUS UNLESS OTHERWISE SPECIFIED.
BREAK / ROUND ALL SHARP EDGES AND DE-BURR ALL DRILLED HOLES

B-TEK SCALES LLC
1510 MATRIX Avenue S.W.
Canton, OH 44706-3281

TITLE: Foundation Plan
BT-7211-200-FECD-SL-D
72' x 11' Concrete Deck
Centurion Truck Scale
200,000# Capacity
100,000# CLC

SIZE	DWG. NO.	REV
D	72 x 11 CDT 2 Manholes Deep Pit	
ELECTRONIC DWG. FILE NO MANUAL REVISIONS	DO NOT SCALE DRAWING	SHEET 1 OF 1

72 x 11 CDT 2 Manholes Deep Pit